大宏智能
DYEHOME MACHINE

COLD STRETCH BAGGING AND PACKING MACHINE

STRAPPING AND WRAPPING INTEGRATED DESIGN

DOUBLE MATERIAL PACKAGING

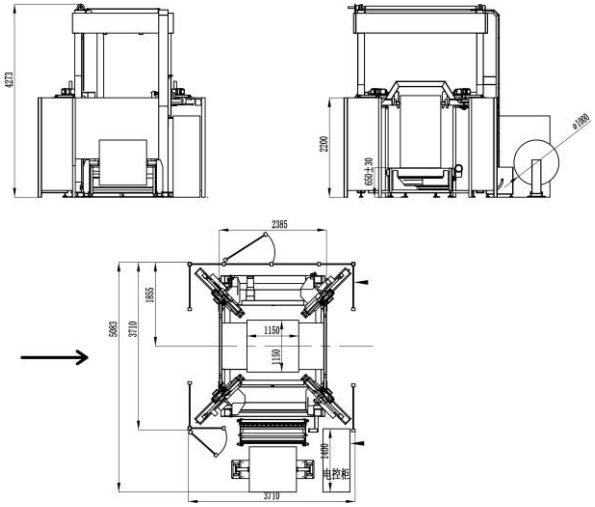

LAYOUT SIZE DRAWING (MM)

SMALL FOOTPRINT；LOW CONSUMPTION；LOW ENERGY CONSUMPTION；STRONG ADAPTABILITY

COLD SHRINK PACKING MACHINE IS SUITABLE FOR THE GOODS STACKED ON THE PALLET TO CARRY ON THE BACK CHANNEL TRANSPORTATION PACKAGING, STORAGE PACKAGING.

Item	Unit	Parameter
Air source pressure	bar	6
Max load weight	Kg	1500/2000
Speed of packing	P/H	60-120
Maximum product height	mm	1800
Power supply	V	380V/3P/5L±10%/50 or 60Hz
Installed power	Kw	21
Reel film diameter	mm	1000
Reel film width	mm	1000
Film thickness	um	80~150
Air consumption	l/min	260
Maximum packable weight	Kg	2000